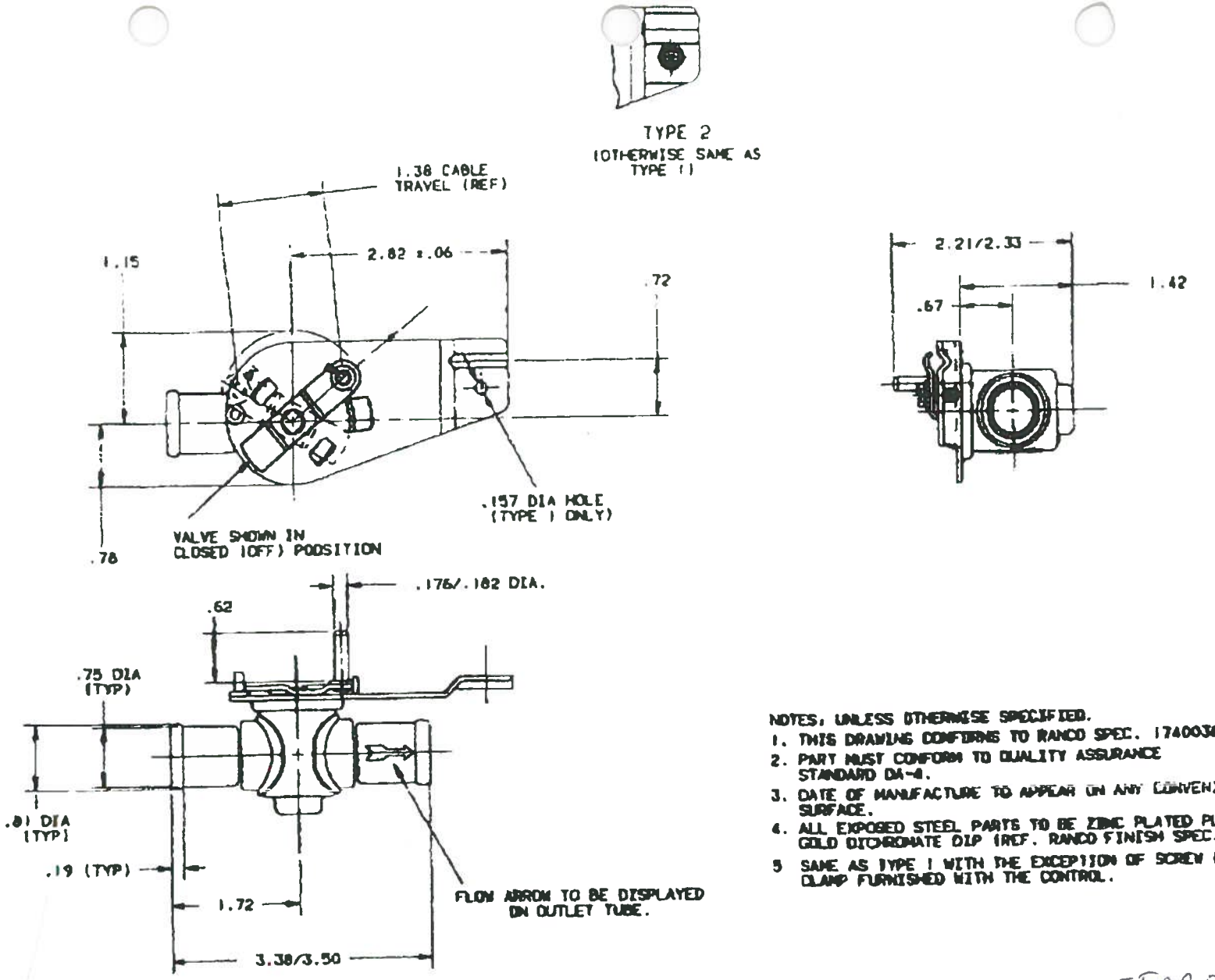

NOTES: UNLESS OTHERWISE SPECIFIED.

1. THIS DRAWING CONFORMS TO RANCO SPEC. 1740036.
2. PART MUST CONFORM TO QUALITY ASSURANCE STANDARD DA-4.
3. DATE OF MANUFACTURE TO APPEAR ON ANY CONVENIENT SURFACE.
4. ALL EXPOSED STEEL PARTS TO BE ZINC PLATED PLUS GOLD DICHROMATE DIP (REF. RANCO FINISH SPEC. 101A).
5. SAME AS TYPE 1 WITH THE EXCEPTION OF SCREW & CABLE CLAMP FURNISHED WITH THE CONTROL.

KL 03 H38C 2255030
"VEDÄ KIINNI"
VIRT. VAIJERILLE

H38C-2255	RTCO-2255A	2	SEE NOTE 5
	RTCO-2255	1	AS SHOWN.

11 REDRAWN ON CADAM				A
21 REVISED FINISH (101A WAS 101)				
LLN	RG	RG	17 JUN 96	581105

KAHA
PL 92, 02771 ESPOO
PUH. (09) 615 68 00
FAX (09) 615 68 301

RANCO AUTOMOTIVE DIVISION

LLN 17 JUN 96		.01
RG 17 JUN 96		
RG 17 JUN 96		.03
O.D.D.		.3

C 9417233

10/01/1996 14:31
10/01/96 TUE 15:13
[redacted]