CARRYING WHEEL PREMIUM

ETI- No. 811495 (Specify the order with the ETI No.)

AL-KO Spare Parts

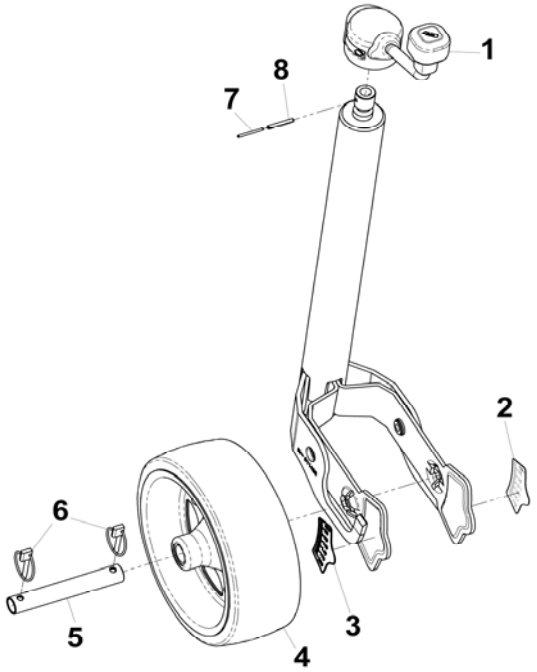

Item	Description	Drawing No.
1	CRANK CPL	691745
2	LABEL SCALE LEFT	691617
3	LABEL SCALE RIGHT	691618
4	WHEEL CPL 230X80	691604
5	AXLE	691615
6	FOLDAWAY PLUG	701495
7	SPRING DOWEL PIN 2,5X30 DIN1481	704761
8	SPRING DOWEL PIN 4X30 DIN1481	702165

Item	Description	Drawing No.

provided	ETI-No.	changed	Change No.	Reason of the change	Revisons-No.
25.01.06	811495_en	13.07.2009	FREIGABE		A