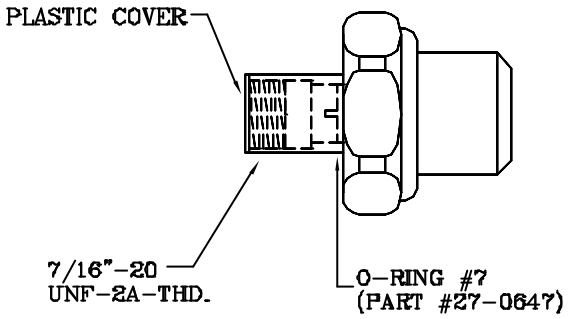

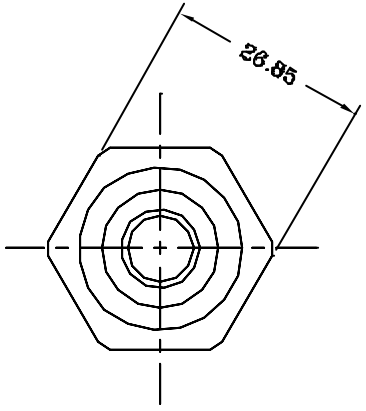

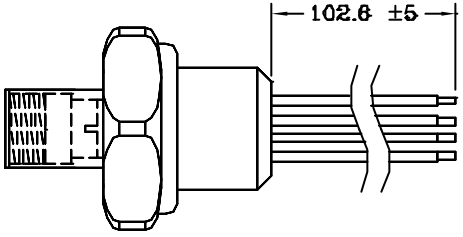

NOTES:

1) TRINARY PRESSURE SWITCH FOR HIGH AND LOW PRESSURE CLUTCH CONTROL AND CONDENSER FAN CONTROL; TWO SPST; TWO POSITION; SNAP ACTING.

2) SWITCH ACTION:
- LOW PRESSURE CUT-OUT 29.0 ±2.9PSI
  CUT-IN 30.5 ±4.4PSI
- MED. PRESSURE CUT-OUT 188.5 ±21.8PSI
  CUT-IN 232.1 ±18.9PSI
- HIGH PRESSURE CUT-OUT 391.6 ±29PSI
  CUT-IN 304.6 ±29PSI

3) MECHANICAL SPECIFICATIONS:
- PRESSURE CONNECTION: 7/16-20 UNF WITH O-RING SEAL.
- EXTERNAL LEAK TEST PRESSURE: 30Kgf/sq.cmG
- PROOF PRESSURE 45Kgf/sq.cmG
- REFRIGERANT: R-12, R-134A
- TEMPERATURE RANGE: -30°C TO 100°C

4) ELECTRICAL SPECIFICATIONS:
- RATED LOAD: 5A AT 12 VDC (CLUTCH)
  1A AT 12 VDC (FAN)
- VOLTAGE OPERATION RANGE: 8 TO 16VDC
- INSULATION RESISTANCE: 50MΩ MIN. AT 500VDC
- VOLTAGE DROP: 0.25V MAX AT RATED LOAD
- DIELECTRIC STRENGTH: 500VAC - 1 MINUTE
- WIRING: RED/WHITE - CLUTCH POWER IN
  BLACK/WHITE - TO CLUTCH
  BLUE/RED - FAN RELAY POWER IN
  BLUE/WHITE - TO FAN RELAY
- LEAD LENGTH: 4", STRIPPED 1/4"

5) ALL DIMENSIONS IN mm, UNLESS OTHERWISE INDICATED.

MCC 37				
SYM	PCS	PART NO.	DESCRIPTION	

CHECK BY: DATE:

SYM	DESCRIPTION	DATE	BY

REVISION

THIS PRINT IS PROVIDED ON A RESTRICTED BASIS AND IS NOT TO BE USED IN ANY WAY DETRIMENTAL TO THE INTEREST OF MOBILE CLIMATE CONTROL INC.

METRIC

Mobile Climate Control Inc.
North York - Ontario - Canada

25-0674
PRESSURE SWITCH

SCALE: NTS BY: JAP
DATE: MAR 13, 2000
DWG: P3-11318 REV: 0