150 HP

AUTOMATIC TROLLEY UNIT FOR RECOVERY, RECYCLING, VACUUM AND CHARGE

User's manual
ENGLISH

WIGAM

Sistemi e strumenti per condizionamento e refrigerazione
Air conditioning and refrigeration systems and instruments
Anlagen und Geräte für Klima- und Kälteanlagen
Systèmes et instruments pour conditionnement et refrigération
Sistemas e instrumentos para el acondicionamiento y refrigeración

INDEX

Layout drawing

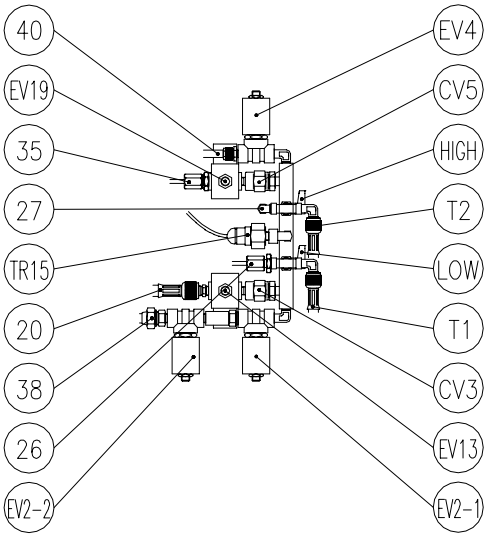

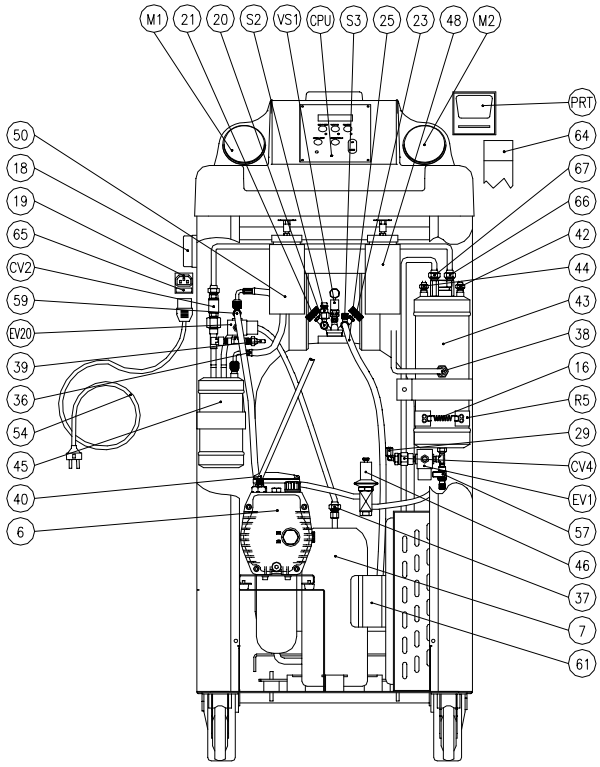

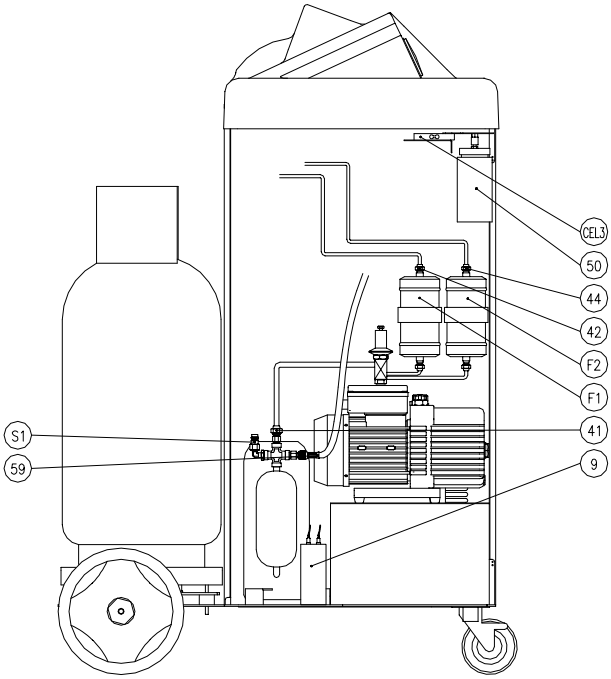

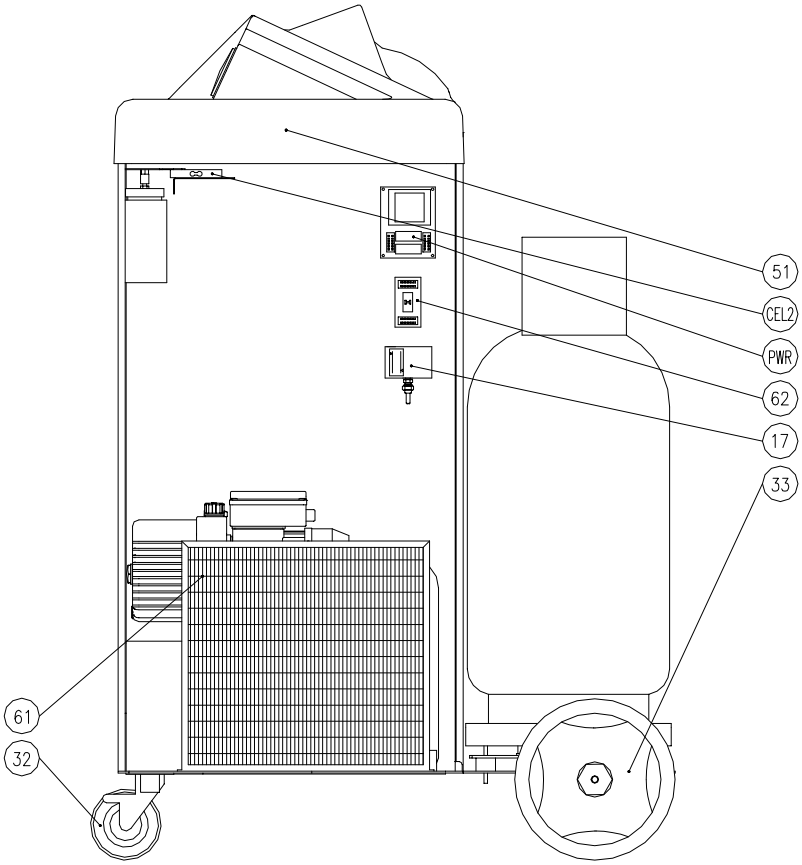
51
CEL2
PWR
62
17
33
61
32

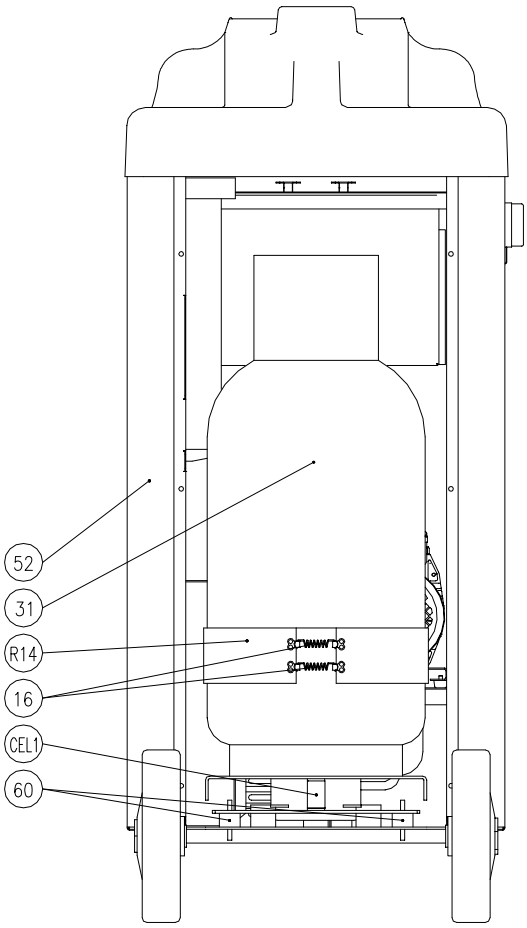
52
31
R14
16
CEL1
60

Hydraulic diagram

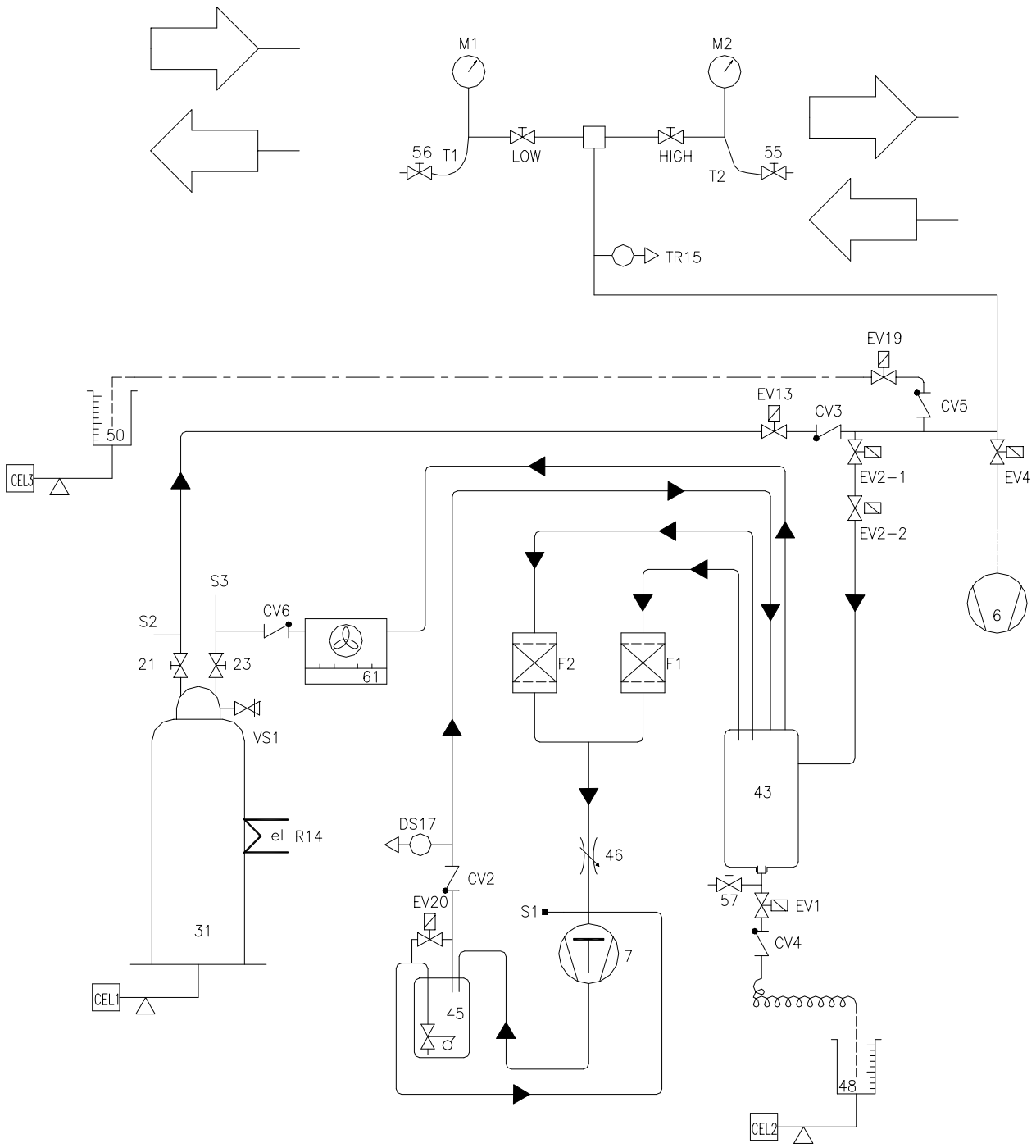

Electric diagram

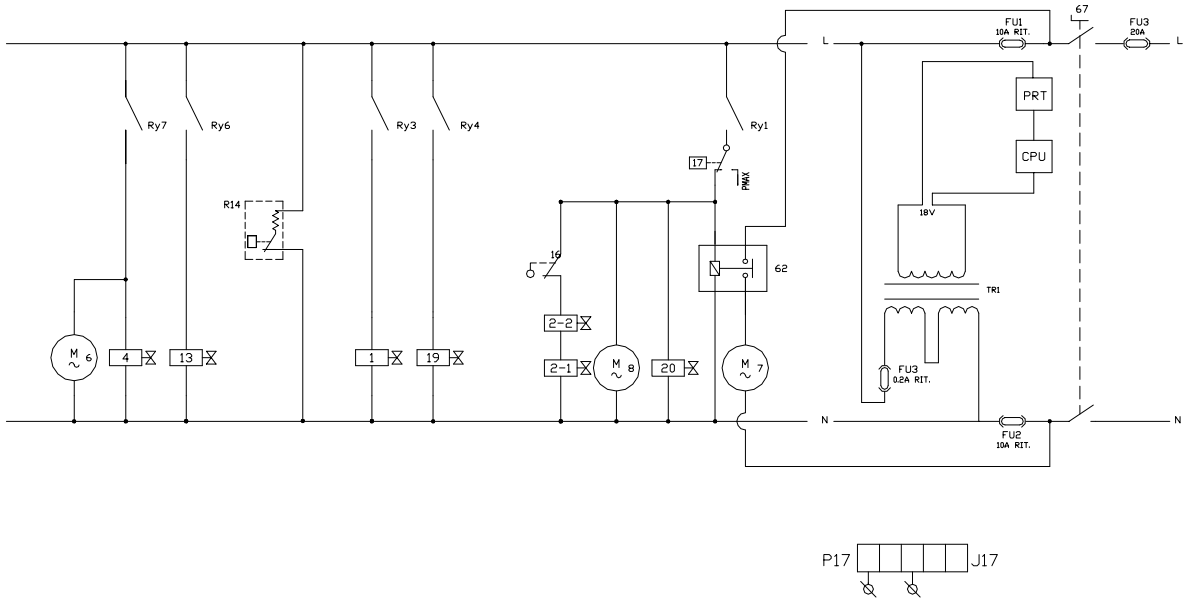

Legend

CEL1	Load cell - 100 kg (refrigerant)	**20**	Refrigerant charge hose
CEL2	Load cell - 5 kg (oil discharge)	**21**	Liquid valve on the bottle
CEL3	Load cell - 5 kg (oil charge)	**23**	Vapour valve on the bottle
CPU	Control board	**25**	Condenser / bottle connecting hose
CV2	Check valve – compressor delivery line	**26**	Capillary hose connecting LOW valve to LP gauge
CV3	Check valve – refrigerant charging line	**27**	Capillary hose connecting HIGH valve to HP gauge
CV4	Check valve – oil discharge line	**29**	Oil discharge capillary tube
CV5	Check valve – oil charging line	**31**	Complete refrigerant bottle
CV6	Check valve - compressor delivery line (condenser)	**32**	Front wheel with brake
EV1	Solenoid valve – oil discharge line	**33**	Rear wheel Ø 250
EV2-1	Solenoid valve 1 - recovery line	**35**	Oil injection capillary tube
EV2-2	Solenoid valve 2 - recovery line	**36**	Hose - pressure return to compressor
EV4	Solenoid valve - vacuum line	**37**	Compressor/compressor oil separator connecting hose
EV13	Solenoid valve - refrigerant charging line	**38**	Valves assembly - distiller connecting hose
EV19	Solenoid valve - oil/UV charging line	**39**	Safety switch capillary hose
EV20	Solenoid valve - pressure return to compressor	**40**	Vacuum pump hose
F1	Filter drier	**41**	Compressor suction hose
F2	Filter drier	**42**	Distiller/filter F1 connecting hose
LOW	Manual valve - LOW	**43**	Distiller / separator
HIGH	Manual valve - HIGH	**44**	Distiller/filter F2 connecting hose
M1	LP gauge	**45**	Oil separator – complete compressor
M2	HP gauge	**46**	Flow regulation valve with hoses
PRT	Printer	**47**	Handle support
PWR	Electric feeder	**48**	Oil discharge bottle
R14	Heater belt with thermostat on the bottle	**50**	Oil/UV charging bottle
S1	Service connection for compressor evacuation	**51**	Plastic cover
S2	Bottle service connection	**52**	Frame
S3	Bottle service connection (1/4” SAE)	**53**	Front door
TR15	Pressure transducer	**54**	Power cable
T1	LOW flexible hose	**55**	HIGH quick coupler
T2	HIGH flexible hose	**56**	LOW quick coupler
VS1	Safety valve	**57**	Manual discharge valve on the distiller
6	Vacuum pump	**59**	Oil return hose to compressor
7	Compressor	**60**	Vibration damping feet on the scale
9	Compressor starting condenser	**61**	Condenser with fan
10	Vacuum pump oil filler plug	**62**	Remote control witch for recovery compressor
11	Vacuum pump sight glass	**64**	Thermal paper roll
12	Vacuum pump oil drain plug	**65**	Fuse on outlet (10A)
16	Spring for heater belt	**66**	Distiller coil inlet tube
17	Safety pressure switch	**67**	Distiller coil outlet tube
18	Main power switch	**68**	Rear door
19	Power outlet (with fuse)	**69**	Handle

Safety precautions

a) **Before using this recovery unit, make sure that the connections to the A/C air-conditioning system have been made correctly. In particular, make sure that the low pressure connection HAS NOT BEEN MADE on the "fuel pressure outlet". In fact, some vehicles have the "fuel pressure outlet" with the same A/C system low pressure connection.**

b) This equipment is designed for trained personnel only, who must know the refrigeration fundamentals, cooling systems, refrigerants and possible damage that pressurized equipment may cause.

c) Carefully read the instructions contained in this manual; strict observance of the procedures described is fundamental to the operator's safety, the perfect state of the unit and constant performances as declared.

d) **The unit must always work under the operator's direct supervision**

e) Do not operate the unit with different refrigerant than the one it has been designed for.

f) Before performing any operation, make sure that the hoses used for connections have been previously evacuated and that they do not contain non-condensable gases.

g) Avoid skin contact; the low boiling temperature of the refrigerant (about -30°C) can cause freezing.

h) Avoid breathing refrigerant vapours.

i) It is recommended to wear suitable protections like safety glasses and gloves; contact with refrigerant may cause blindness and other personal injuries.

j) Do not operate near open flames and hot surfaces; the high temperatures decompose the refrigerant releasing toxic and caustic substances which are hazardous for the operator and the environment.

k) Always make sure that the unit is connected to a suitably protected mains supply provided with an efficient earth connection.

l) Before performing maintenance operations or when the unit will not be used for a long period of time, turn the unit off by turning the main switch to 0 and disconnect the power supply cord; absolutely follow the sequence of operations.

m) Operate the unit only in locations with suitable ventilation and a high number of air changes.

n) Before disconnecting the unit, make sure that the cycle has been completed and that all valves are closed in order to avoid release of refrigerant to the atmosphere

o) Never fill any tank with liquid refrigerant to more than 75% of its maximum capacity.

p) During operations avoid release of refrigerant to the environment; this precaution is required by international environmental standards and is essential to avoid difficult leak detection in a refrigerant polluted environment.

q) The equipment must always work under the operator's control.

r) Protect the unit from dripping.

s) Do not modify the calibration of safety valves and control systems.

t) If you recover refrigerant from a cooling system equipped with a water evaporator and/or condenser, it is necessary to drain water from the evaporator and/or condenser or to keep the circulation pump running during the entire recovery operation in order to avoid frosting. This appliance is not intended for use by persons (including children) with reduced physical, sensory or mental capabilities, or lack of experience and knowledge, unless they have been given supervision or instruction concerning use of the appliance by a person responsible for their safety. Children should be supervised to ensure that they do not play with the appliance

u) In case of damage to the power cord, please replace it immediately with an original spare supplied by Wigam.

1. Introduction to recovery unit 150-HP

150-HP unit permits quick and efficient recovery of refrigerant from the A/C system, refrigerant recycling, system evacuation, check for tightness, additive or lubricant injection, the subsequent charge with refrigerant and measurement of the operating pressures.

1.1 TECHNICAL SPECIFICATIONS

Model	150-HP
Refrigerant	R134a/R404A/R407C
Maximum storage capacity	40 kg (4 kg supply)
Maximum recovery rate	1,0 kg/min
Power supply	230/1/50
Power input	1400 W
Storage temperature	-10 ÷ +50 °C
Working temperature	0 ÷ 40 °C
Degree of protection	IP24
Noise level	< 70dB (A)
Refrigerant max charge	30 kg

1.2 UNIT'S COMPONENTS

Component	***Features***
Compressor	21 cc recovery rate 1,0 kg/min
Vacuum pump	Rotary vane type and dual phase,180 l/min
Filter drier	Dehydrating capacity of 75 PPM of water
Flexible hoses	L=2.5 meters with quick couplers
Fan	Axial type and high flow rate
Refrigerant bottle	Capacity 40 kg with liquid and vapour connections
Distiller - Separator	High heat exchange distillation chamber with automatic flow control
Bottle for oil discharged	Capacity of 500 grams of oil, on load cell
Bottle for oil charge	Capacity of 500 grams of oil, on load cell
Control module	Fast access keys to the functions
Printer	Thermal type with 57mm roll

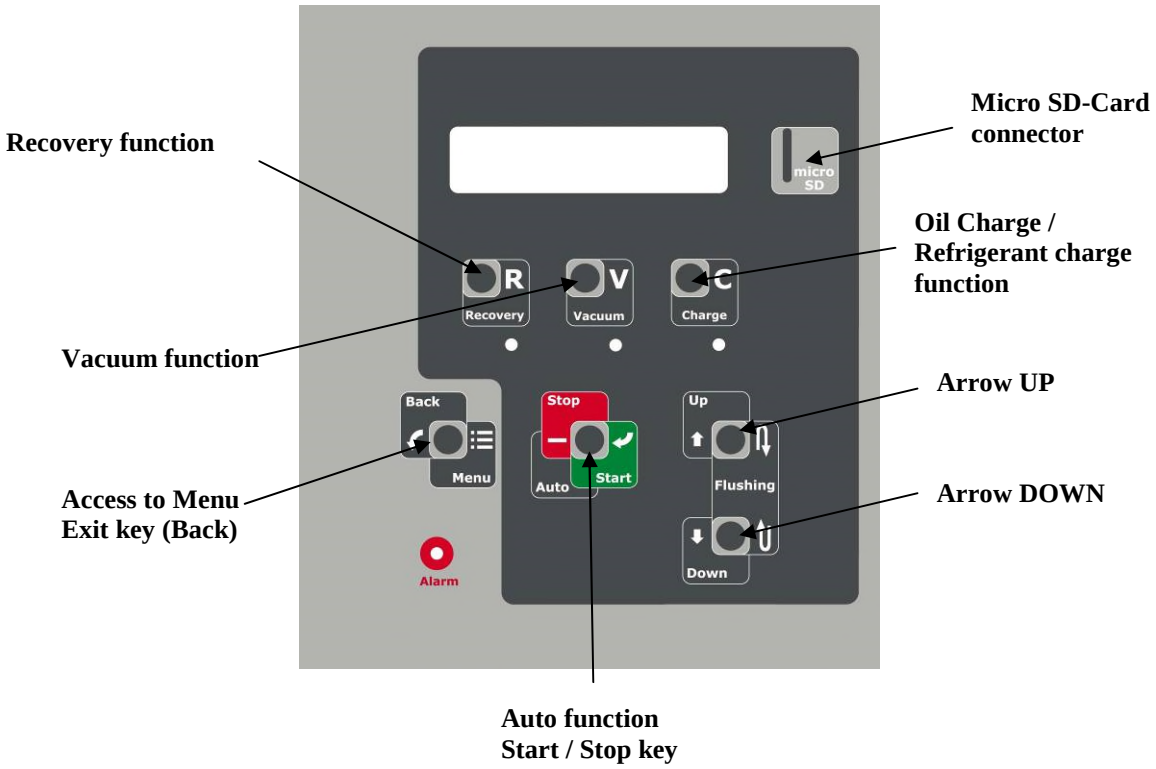

Access to the Refrigerant Recovery function

Access to the Vacuum function

Access to the Oil charge/ Refrigerant charge function

Standby – Access to the Menu for the modification of the unit's settings parameters
During a function setting – Back to the standby screen (during refrigerant charge, press for more than 1 second)
During Refrigerant charge setting – Access to the Database

Standby – Access to the Automatic function
During a function – Start and end of the function
During a function under way – if pressed for more than 3 seconds, it stops the function for emergency

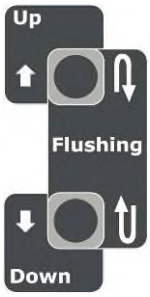

When pressed singly – enables to shift through the various ranges and modify the numerical values
When pressed both at the same time – Start of the Flushing function

2. Preparing unit 150-HP for use

2.1 CHECKING THE VACUUM PUMP OIL LEVEL

Before checking the oil level, the unit must be placed on a level surface and its power supply must be **turned off**.
The user must check that the vacuum pump oil level covers half of the sight glass (see drawing below).

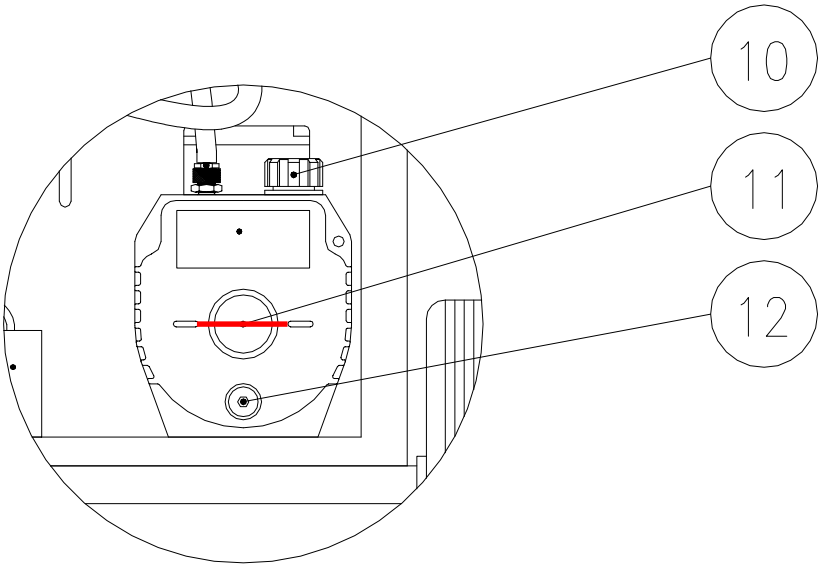

2.2 TURNING 150-HP UNIT ON FOR THE FIRST TIME

a) Connect the unit to the power supply
b) Place the **18** switch on position 1.
c) The unit will automatically ask for the interface language; select the language by means of the **UP/DOWN** arrows and confirm with **START**.
d) Then, the zeroing of all the scales will start. The process is completely automatic and will take about 1 minute.
e) At the end of the procedure, the values of the scales will appear on the display.

R	1	3	4	a				0	.	0	0	0	k	g	Ξ
1	0	:	3	4			0	8	/	1	0	/	1	2	▼

Standby screen 1

O	l	i	o		i	n							0	g	▲
O	l	i	o		o	u	t						0	g	Ξ

Standby screen 2

f) The next times you will turn the unit on, the display will show the software and hardware version of the unit and the standby screen will appear right away.

2.3 SELECTION OF THE REFRIGERANT THAT MUST APPEAR ON THE DISPLAY

When using the unit for the first time, it is necessary to set on the display the type of gas that will be used. It is possible to choose one of the following gases:

- R134a (set in the factory)
- R404A (5)
- R407C (2)

a) Connect the unit to the power supply
b) Place the switch ref. **18** on position 1.
c) In case of R134a, the unit is already set on it, so no need to modify anything.
d) Press the **Menu** key.
e) Select “Service”.
f) Digit the password **Recovery** – **Vacuum** – **Charge** – **Menu**.

IMPORTANT! *With this procedure, you go into the menu for the modification of the unit parameters. Carefully follow the instructions given below and DO NOT modify any other parameter than the one indicated.*

g) By means of the **Down** arrow, go to parameter n° 39 “*Gas_Type”*; press **Start**, modify the value to value 2 by means of the **Up/Down** arrows to select R407C; otherwise, modify the value to 5 to select R404A. Confirm with **Start**.
h) Press **Menu** to leave the procedure. The selected gas will appear on the display.
i) Now start a vacuum cycle of 2 minutes on the hoses (see section 3.2).

2.4 FILLING REFRIGERANT INTO THE INTERNAL BOTTLE

The unit is supplied with no refrigerant inside. It is thus necessary to follow the below procedure to fill the exact quantity of refrigerant into the refrigerant bottle.

a) Place the bottle containing refrigerant so that liquid refrigerant will come out (bottle with tube upright, bottle without tube upside down).
b) Connect the male LP connection (supplied in the kit) to the refrigerant bottle (only in case the bottle is not equipped with a connection).
c) Connect the quick coupler ref. **56** (blue) to the bottle containing refrigerant. Open the hand-wheel of the coupler.
d) Open the **LOW** valve and close the **HIGH** valve.
e) Make sure that the valve on the external bottle is closed.
f) Press the **Vacuum** key on the control module
g) Set a vacuum time of 5 minutes by means of the **UP/DOWN** arrows

					V	a	c	u	u	m					
T	i	m	e											5	‘

h) Press the **START** key to start the function and wait for the end of it (beep)
i) Once the vacuum cycle is completed and you are back in the standby screen, slowly open the valve of the bottle containing refrigerant
j) Press the **Recovery** key
k) Set the refrigerant quantity to recover (we suggest 10.000 kg) by means of the **Up/Down** arrows

				R	e	c	o	v	e	r	y				
R	1	3	4	a				1	0	.	0	0	0	k	g

l) Press the **START** key to start the function.
m) Wait until the recovery cycle is completed. A beep will let the user know that the cycle is over and the quantity of recovered refrigerant will be displayed.

***IMPORTANT!** In this moment, there is refrigerant in the hoses. Continue the procedure in order to prevent gas dispersion in the environment*

n) Close the valve on the bottle containing refrigerant
o) Start a new recovery cycle set on **ALL**

				R	**e**	**c**	**o**	**v**	**e**	**r**	**y**				
R	**1**	**3**	**4**	**a**							**A**	**L**	**L**		

p) Press the **START** key to start the function.
q) Wait until the recovery cycle is completed; a beep will let the user know that the cycle is over and the quantity of recovered refrigerant will be displayed.
r) Disconnect the hose from the bottle

3. Using unit 150-HP

3.1 REFRIGERANT RECOVERY

***WARNING!** During recovery, regulate the LOW and HIGH valves on the control panel, so that the input pressure never rises over 5 bar*

a) Turn on the engine with closed hood
b) Turn the air-conditioner on and have it run for some minutes
c) Open the hood and set the air-conditioner fan to maximum speed
d) Have the vehicle engine run slowly (800 - 1200 revolutions/min) for a few minutes
e) Turn the vehicle engine off and have the air-conditioner fan run at maximum speed and start the recovery operations
f) Connect the hoses to the A/C system which needs a maintenance. Open the hand-wheels on the couplers.
g) Turn the **18** switch to position 1.
h) Open the **LOW** and **HIGH** valves according to how the connection on the system was made
i) Press the **Recovery** key

				R	e	c	o	v	e	r	y				
R	1	3	4	a							A	L	L		

j) The unit sets the recovery function on **ALL** by default: in this way, the unit recovers all the refrigerant there is inside the car.
k) Press the **START** key to start the function. During the recovery cycle, the recovered refrigerant quantity appears on the display.

		R	e	c	.	u	n	d	e	r		w	a	y	
R	1	3	4	a					0	.	0	0	0	k	g

l) In case of emergency, it is possible to leave the function by pressing the **STOP** key for more than 3 seconds.
m) During the cycle, the unit performs the automatic oil discharge

O	i	l		d	i	s	c	h	a	r	g	e			
													0	g	

n) Wait until the recovery cycle is completed; a beep will let the user know that the cycle is over and the quantities of recovered refrigerant and oil will be displayed.

R	1	3	4	a					1	.	1	0	0	k	g
O	i	l			O	u	t					1	0	g	

***WARNING!** Do not pollute environment with oil; it is a special waste and must be disposed of according to the regulations in force.*

3.2 VACUUM + VACUUM TEST

a) Connect the hoses to the A/C system which needs a maintenance
b) Turn the **18** switch to position 1.
c) Open the **LOW** and **HIGH** valves according to how the connection on the system was made
d) Press the **Vacuum** key

V	a	c	u	u	m										
T	i	m	e										3	0	‘

e) Set a vacuum time by means of the **UP**/**DOWN** arrows. We suggest a vacuum time of at least 30 minutes.
f) Press the **START** key to start the function. (In case of emergency, it is possible to leave the function by pressing the **STOP** key for more than 3 seconds)
g) When the vacuum cycle is over, the test phase starts to check the possible presence of leaks in the A/C system.
h) When the vacuum test is over, or if there are leaks, a beep will inform the operator. The display will show the information on the cycle just performed.

V	a	c	u	u	m								3	0	‘
V	a	c	u	u	m		t	e	s	t				O	K

3.3 OIL / UV – REFRIGERANT CHARGE

a) Connect the hoses to the A/C system which needs a maintenance
b) Turn the **18** switch to position 1.
c) Open the **LOW** and **HIGH** valves according to how the connection on the system was made

■ ***WARNING!*** *Always perform the charging function with a system* ***which has been previously evacuated****. In case the evacuation has not been effected correctly, the unit will inform the user by means of an alarm*

d) Press the **Charge** key
e) The operator will be asked to select the type of charge: whether it will be effected through a single hose (blue or red) or whether it will be effected through both hoses. This enables the unit to calculate the correct value of the pre-charge (when it is set).

2		h	o	s	e	s		L	+	H					▲
1		h	o	s	e										▼

f) Confirm with **START** and then the screen for setting the oil/UV quantity will appear

O	i	l									S	A	M	E	
O	i	l			M	a	x				1	5	0	g	

g) The unit sets **SAME** by default. During the oil injection phase, the same quantity of oil that has been recovered during recovery will be re-injected into the system.
h) The unit checks the maximum quantity that can be charged and indicates it on the second line of the display.
i) In case you would like to set a different quantity than **SAME**, you can modify it the quantity by means of the **UP/DOWN** arrows and confirm with **START**.

■ ***WARNING!*** *If you do not want to inject oil/UV, set the value on 0 grams*

Suggested quantities for refilling the A/C system with oil

According to the type of A/C system component you have replaced, you need to fill in the lubricant quantity indicated below, even if no oil has been extracted during recovery.

Evaporator:	50cc
Condenser:	30cc
Filter:	10cc
Pipes:	10cc

In any case the operator must follow the instructions of the A/C system manufacturer.

j) Press **Start** and the screen for setting the refrigerant quantity will appear

R	1	3	4	a				0	,	3	0	0	k	g	▲
D	a	t	a	b	a	s	e								▼

k) If you press **START** on the first line, the refrigerant quantity can be set manually, by means of the **UP/DOWN** arrows and confirming with **START**

R	1	3	4	a					0	,	3	0	0	k	g
M	a	x							4	,	6	6	5	k	g

l) Otherwise, on the second line, you can gain access to the database and choose between Standard Database (containing the main cars on the market) and Personal Database (created by the user).

D	b		S	t	a	n	d	a	r	d					
D	b		P	e	r	s	o	n	a	l					

m) After having set the refrigerant quantity either by means of the manual menu or by means of the database menu, you will have the START screen (cycle start) where the settings will be summarized on the second line.

*	S	t	a	r	t		S	t	a	r	t	*			
..	..	..	..	..	..	..	..	..	..	..	..	..	..	..	..

n) Press **START** to start the function.

■ ***WARNING!*** *The refrigerant charge cycle is performed "by steps" in order to reach a high precision. You may hear subsequent "clicks" inside the unit during this phase.*

o) When the function is completed, a beep will let the operator know that the cycle is over and the display will show the information on the cycle just performed.

R	1	3	4	a					0	,	3	0	0	k	g
O	i	l			i	n							5	g	

3.4 AUTOMATIC CYCLE

a) Connect the hoses to the A/C system which needs a maintenance
b) Turn the **18** switch to position 1.
c) Open the **LOW** and **HIGH** valves according to how the connection on the system was made
d) Press the **Auto** key

> ***WARNING!*** *At the cycle start, the unit will check the available volume inside the bottle. In case the total weight on the scale exceeds 35.000 kg, 150-HP unit will display the following alarm signal: "Check bottle weight". The same check is performed for the oil quantity in the "New Oil" dosimeter*

p) The operator will be asked to select the type of charge: whether it will be effected through a single hose (blue or red) or whether it will be effected through both hoses. This enables the unit to calculate the correct value of the pre-charge (when it is set).

2		h	o	s	e	s		L	+	H					▲
1		h	o	s	e										▼

e) Confirm with **START** and then the screen for setting Vacuum will appear

					V	a	c	u	u	m					
T	i	m	e										3	0	'

f) Modify the vacuum time by means of the **UP/DOWN** arrows and confirm with **START**.

> ***WARNING!*** *The function of refrigerant recovery will be performed in case refrigerant is detected in the A/C system when connecting the unit to it.*

g) Now the screen for setting the oil/UV quantity appears

O	i	l								S	A	M	E		
O	i	l			M	a	x				1	5	0	g	

h) The units sets **SAME** by default. During the oil injection phase, the same quantity of oil that has been recovered during recovery will be re-injected into the system.

i) The units checks the maximum quantity that can be charged and indicates it on the second line of the display.

j) In case you would like to set a different quantity than **SAME**, you can modify it the quantity by means of the **UP/DOWN** arrows and confirm with **START**.

> ***WARNING!*** *If you do not want to inject oil/UV, set the value on 0 grams*

<u>Suggested quantities for refilling the A/C system with oil</u>

According to the type of A/C system component you have replaced, you need to fill in the lubricant quantity indicated below, even if no oil has been extracted during recovery.

Evaporator:	50cc
Condenser:	30cc
Filter:	10cc
Pipes:	10cc

In any case the operator must follow the instructions of the A/C system manufacturer.

k) Press **START** and the screen for setting the refrigerant quantity will appear

R	1	3	4	a				0	,	3	0	0	k	g	▲
D	a	t	a	b	a	s	e								▼

l) If you press **START** on the first line, the refrigerant quantity can be set manually, by means of the **UP/DOWN** arrows and confirming with **START**.

R	1	3	4	a					0	,	3	0	0	k	g
M	a	x							4	,	6	6	5	k	g

m) Otherwise, on the second line, you can gain access to the database and choose between Standard Database (containing the main cars on the market) and Personal Database (created by the user).

D	b		S	t	a	n	d	a	r	d					
D	b		P	e	r	s	o	n	a	l					

n) After having set the refrigerant quantity either by means of the manual menu or by means of the database menu, you will have the **START** screen (cycle start) where the settings will be summarized on the second line.

*	S	t	a	r	t		S	t	a	r	t	*			
..	..	..	..	..	..	..	..	..	..	..	..	..	..	..	..

o) Press **START** to start the function.
p) When the function is completed, a beep will let the operator know that the cycle is over and the display will show the information on the cycle just performed.

R	1	3	4	a					1	.	1	0	0	k	g
O	i	l			O	u	t					1	0	g	.

V	a	c	u	u	m								3	0	‘
V	a	c	u	u	m		t	e	s	t				O	K

O	i	l										1	0	g	.
R	1	3	4	a					0	.	7	0	0	k	g

T

3.5 FLUSHING

a) Connect the hoses to the A/C system which needs a maintenance
b) Turn the **18** switch to position 1.
c) Open the **LOW** and **HIGH** valves according to how the connection on the system was made
d) Press the **UP/DOWN** arrows at the same time to gain access to the function menu

V	a	c	u	u	m								1	0	‘
F	l	u	s	h	.	c	y	c	l	e	s			3	

e) Set the vacuum time by means of the **UP/DOWN** arrows and press **START** to confirm
f) Set the number of cycles by means of the **UP/DOWN** arrows and press **START** to start the function
g) When the function is completed, a beep will let the operator know that the cycle is over and the display will show the information on the cycle just performed

IMPORTANT! *At the cycle start, the unit will check the available volume inside the bottle. In case the total weight on the scale is lower than 10.000 kg, 150-HP unit will display the following alarm signal: “Check bottle weight”. It is indeed necessary to have at least 10.000 kg of refrigerant inside the bottle to perform this function.*

3.6 CHECKING THE A/C SYSTEM OPERATING PRESSURES

a) Make sure that the **LOW** and **HIGH** valves are closed and that the **18** switch is on position **0**
a) Connect the **T1** hose to the A/C system low pressure side
b) Connect the **T2** hose to the A/C system high pressure side
c) Start the compressor of the A/C system
d) Read the pressure and its corresponding evaporation temperature on the **M1** pressure gauge
e) Read the pressure and its corresponding condensing temperature on the **M2** pressure gauge
f) Compare the values with the ones suggested by the cooling system manufacturer

3.7 DISCONNECTING THE UNIT FROM THE A/C SYSTEM

At the end of the charging function or at the end of the checking of the operating pressures, some liquid refrigerant is still inside the hoses. In order to minimize the residual quantity of refrigerant inside the hoses, follow the below procedure:

a) Close the hand-wheel of the quick coupler ref. **55** (red) and disconnect the **T2** hose from the A/C system while the A/C system compressor is running
b) Make sure that the **T1** hose is connected to the A/C system
c) Open the **LOW** and **HIGH** valves in order to have all the liquid refrigerant sucked by the A/C system
d) As soon as the pressures on the high and low pressure gauges are the same and do not exceed 2÷3 bar, close the hand-wheel of the quick coupler ref. **56** (blue) and disconnect the **T1** hose from the A/C system
e) Perform a recovery cycle to suck the remaining refrigerant from the hoses so that the unit is immediately ready for the next operation
f) Turn the unit off (**18** switch in position **0**)
g) Close the **LOW** and **HIGH** valves
h) Carefully screw the protective caps on the A/C system service valves
i) Using a leak detector, check the A/C system for leaks

■ ***IMPORTANT!*** *The introduction of tracer additives and the following use of a UV leak detector will make it easier to locate the point of the possible leak in the future*

3.8 SETTING MENU

If you press the **MENU** key in the standby screen, you can gain access to the setting menu of the unit.

Car plate By pressing the **START** key, it is possible to type the plate of the car on which you are making maintenance. You can modify each single field by means of the **UP/DOWN** arrows and move forward by means of the **START** key. Move forward up to the last field available with the **START** key.

Language By pressing the **START** key, it is possible to change the language of the unit. Shift through the languages by means of the **UP**/**DOWN** arrows and confirm with **START**

Unit of measurement By pressing the **START** key, it is possible to modify the unit of measurement (INTERNATIONAL or IMPERIAL). Shift by means of the **UP**/**DOWN** keys and confirm with **START**

Inner Database By pressing the **START** key, it is possible to make your own database. Shift to the field you want to modify by means of the **UP**/**DOWN** keys and confirm with **START**. Modify each digit by means of the **UP**/**DOWN** arrows and confirm with **START**. Then type the value of the refrigerant charge by means of the **UP**/**DOWN** arrows and confirm with **START**

Date and Hour By pressing the **START** key, it is possible to set the date and hour. Modify each value by means of the **UP**/**DOWN** arrows and confirm with **START**

Calibration See section 3.10 below

Service By pressing the **START** key, it is possible to make some service operations using several keys combinations

Password **Recovery** - **Down** - **Charge** - **Vacuum***:* Cancellation of all the data saved on the SD-Card.

Password **Vacuum - Charge - Down - Up** : total zeroing of all the scales

Contrast regulation By pressing the **START** key, it is possible to modify the value of the display contrast by means of the **UP**/**DOWN** arrows and confirming with **START**.

Data exportation By pressing the **START** key, it is possible to export the services performed by the unit into the SD-card (from inside memory to SD-Card). The unit creates a .txt file to import into your own PC. In case the message “ERROR CODE 08” appears, re-start the unit and try again the exportation procedure.
To cancel all the data saved in the memory card, follow the procedure explained at **“Service”**

Workshop data By pressing the **START** key, it is possible to modify the 6 lines available on the report to write some information about your own workshop. Once the information have been written, they will be printed on each report.

4. Service procedures

4.1. CALIBRATION MENU

> ***IMPORTANT!*** *The calibration operations are very delicate. Mistakes in this phase can compromise the functioning of the whole unit. These operations must be effected by qualified people! In order to perform the calibration operations, it is necessary to have certified instruments supplied by Wigam*

If you press the **MENU** key in the standby screen and you select "**Calibration**", you can gain access to the calibration menu of the unit.
To be able to enter the menu, it is necessary to type the following password (combination of keys in succession): **Up** - **Vacuum** - **Charge** - **MENU**.

It is possible to perform the calibration of:

a) Refrigerant scale
b) Oil/UV scale
c) Exhausted oil scale
d) Pressure sensor

4.1.1. REFRIGERANT SCALE CALIBRATION

a) Empty the bottle from all its refrigerant and make a vacuum inside of it for at least 15 minutes
b) After having gained access to the Calibration menu, select "Refrigerant"
c) Press the **START** key to memorize value Zero
d) Then place the sample weight on the refrigerant bottle
e) Press the **START** key to memorize the weight
f) Type the weight value by means of the **UP/DOWN** arrows and confirm with **START**

4.1.2. OIL/UV SCALE CALIBRATION

a) Empty the oil charge bottle
b) After having gained access to the Calibration menu, select "Oil in"
c) Press the **START** key to memorize value Zero
d) Then place the sample weight on the bottle
e) Press the **START** key to memorize the weight
f) Type the weight value by means of the **UP/DOWN** arrows and confirm with **START**

4.1.3. EXHAUSTED OIL SCALE CALIBRATION

a) Empty the oil discharge bottle
b) After having gained access to the Calibration menu, select "Oil out"
c) Press the **START** key to memorize value Zero
d) Then place the sample weight on the bottle
e) Press the **START** key to memorize the weight
f) Type the weight value by means of the **UP/DOWN** arrows and confirm with **START**

4.1.4. PRESSURE SENSOR CALIBRATION

> ***IMPORTANT!*** *The calibration operation allows to restore the calibration values set in our factory. Carefully follow the instructions given by the display*

a) After having gained access to the Calibration menu, select "Press. sensor"
b) Start the procedure by pressing the **START** key
c) Perform the calibration in vacuum; wait for the successful result of calibration
d) Unscrew the high pressure quick coupler ref. **55** (red) and open the **HIGH** valve (when the message "Ambient pressure" appears on the display). Press **START** to go on and complete the procedure.

e) Screw back the quick coupler previously removed

IMPORTANT! *The above procedure introduces atmospheric air inside the hoses. Thus make a vacuum cycle of about 5 minutes to remove the possible moisture from the hoses.*

4.2. EMPTYING THE INTERNAL REFRIGERANT BOTTLE

a) Make a vacuum of at least 15 minutes in an external bottle able to contain the refrigerant there is in the internal bottle of the unit.
b) Remove the rear closing door ref. **68**.
c) By means of the HP quick coupler ref. **55** (red), connect the **T2** hose to the **S2** service connection of the internal bottle (after having removed the protection cap).
d) Connect a service hose (with valve opener) between the valve of the external bottle (previously evacuated) and the **S3** service connection of the internal bottle.
e) Close the valve ref. **23**.
f) Open the **HIGH** valve and close the **LOW** valve.
g) Turn the hand-wheel of the coupler ref. **55** (red) to open it
h) Start the Recovery "**ALL**" automatic function to empty the internal bottle completely; recovery will stop automatically when there will be no more refrigerant inside the unit.
i) Disconnect the service hose from the **S3** service connection and remount the protection
j) Start the Vacuum function by opening the **HIGH** valve on the control panel and perform vacuum and vacuum test for about 30 minutes
k) At the end of the vacuum and vacuum test function, disconnect the **T2** hose from the **S2** service connection**,** remount the protection cap and proceed with the scale calibration (see section 4.1.1)
l) At the end of operations, re-open the valve ref. **23** and reassemble the rear door.

4.3. "ZERO" SCALE CHECK

The following procedure allows to zero all the scales of the unit at the same time. Such procedure must be performed when the scales do not show the correct value of 0 when the unit is completely empty.

a) Make sure that the refrigerant bottle of the unit and the oil bottles are empty.
b) Wait at least 2 minutes so that the bottle/scale assembly stabilizes before proceeding.
c) Press the **Menu** key
d) Select "Service" by means of the **UP/DOWN** arrows.
e) Confirm by pressing the **START** key.
f) Press the following keys in succession: **Vacuum**, **Charge**, **Down**, **Up**.
g) When coming back to the standby screen, all the scales will be placed on the value 0.

5. Routine maintenance

5.1 MATERIAL FOR ROUTINE MAINTENANCE

n°1 filter direr, model XH412
n°1 bottle mineral oil for vacuum pump, model K1L
n°1 bottle of oil for compressor, model SW32
n°1 kit of gaskets, model G19020

5.2 PERIODIC OPERATIONS

a) **Check all swivel connections for tightening every 10 operations**
b) Check the vacuum pump oil level; the oil must be changed at least every 100 hours of operation or once every six months even if the unit is not used frequently. The pump must be off when checking the oil level. Anyway, the unit will inform the operator when the oil must be changed.

5.3 CHANGING THE VACUUM PUMP OIL

The vacuum pump oil must be changed whenever the message “Change vacuum pump oil” appears on the display when the unit is turned on.
The oil also needs to be changed whenever it becomes cloudy. Contaminated oil reduces vacuum pump performances and irreversibly damages its mechanical components.
All draining and refilling operations must be performed when the pump is turned off.
To avoid reduction of the pump efficiency and to maintain its performances, use only K1L oil for maintenance.

a) Before draining the oil, have the pump run for at least 10 minutes with the **HIGH** and **LOW** valves closed.
b) Turn the recovery unit off by turning the **18** switch to position 0 and disconnect the power cord; strictly observe the sequence of operations
c) Remove the front door ref. **53** of the unit
d) Unscrew the drain plug ref. **12** located at the bottom of the pump
e) Completely drain the oil
f) Screw the drain plug on again
g) Unscrew the filler plug ref. **10** situated on top of the pump
h) Slowly refill the pump with oil until the level covers half of the sight glass (ref. **11**) located on the side of the pump
i) Screw the oil plug on again and re-install the previously removed panel again
j) When the oil change procedure is completed, turn the unit on by turning the **18** switch to position 1
k) When the message “Change vacuum pump oil” appears on the display, if you press the **START** key, then the counter is set at zero.

WARNING! *Do not pollute environment with oil; it is a special waste and must be disposed of according to the regulations in force*

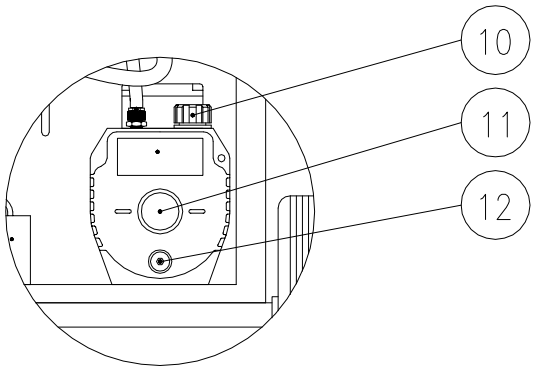

5.4 REPLACING THE FILTER DRIER

The filter must be replaced whenever the message “Replace filter” appears on the display when the unit is turned on.
The replacement must be effected at the end of the recovery cycle.

a) Turn the recovery unit off by turning the **18** switch to position **0** and disconnect the power cord; strictly observe the sequence of operations
a) Remove the rear door of the unit
b) Remove the old filter (**F1**) by unscrewing connections ref. **41**, **42** and **44**

IMPORTANT! *This equipment is designed for trained personnel only, who must know the refrigeration fundamentals, cooling systems, refrigerants and possible damage that pressurized equipment may cause.*

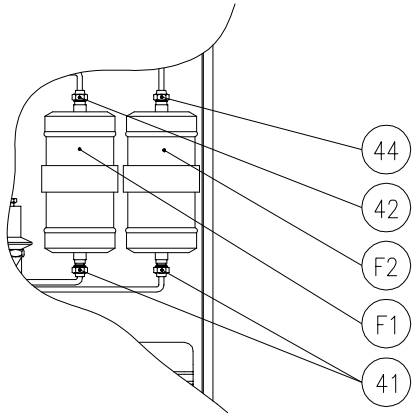

WARNING! *Do not pollute environment with the used filter; it is a special waste and must be disposed of according to the regulations in force.*

c) Remove the gaskets from inside the hoses (ref. **41**, **42** and **44**)
d) Install new gaskets
e) Install new filter driers
f) Remove the protective cap from the **S1** connection
g) Connect the valve ref. **56** to the **S1** service connection
h) Open the **LOW** valve and close the **HIGH** valve
i) Plug in the unit and turn the **18** switch to position **I**
j) Press the **Vacuum** key to start the vacuum pump and keep evacuating for about 30 minutes
k) When the vacuum operation is complete, close the **LOW** valve and disconnect the valve ref. **56** from the **S1** service connection
l) Remount the protective cap on the **S1** connection, the plastic cover and the rear door
m) When the filter replacement procedure is completed, turn the unit on by turning the **18** switch to position **I**
n) When the message “Replace filter” appears on the display, if you press the **START** key, you enter the procedure for filter replacement. It is necessary to type the serial number of the filter and then confirm by pressing the **START** key.

6. Troubleshooting

If there is a problem in the unit, this will be displayed with an alarm message. You can recognize the alarm screen easily from the symbol on the left upper side of the screen and from the red led.

Message	Type of error	Solution
No refrigerant	After connecting the unit to the A/C system, the values of the pressure sensors do not vary	Make sure that the unit is connected to the A/C system correctly. Make sure that the A/C system has no refrigerant inside
Refrigerant bottle full	The refrigerant bottle has reached its maximum capacity	Provide to empty the bottle from the refrigerant
Max time reached	The maximum time to complete the cycle has been reached	Re-start the cycle and in case the same problem occurs, contact the after-sales service.
Oil discharge bottle full	The oil discharge bottle has reached its maximum capacity	Provide to empty the bottle from the oil discharged
Max number of attempts reached	The recovery cycle has started more than 3 times	Re-start the recovery cycle and if the problem still occurs, contact the after-sales service
Presence of refrigerant	The unit has found refrigerant when starting the vacuum function. Presence of refrigerant inside the A/C system	Perform a recovery cycle before starting the vacuum function
Vacuum leak	During the vacuum test, there was an abnormal rise of pressure	The A/C system is not completely tight. Provide to find the leak in the A/C system and proceed with a new vacuum cycle.
Max pressure	The maximum pressure inside the recovery circuit has been reached.	Make sure that all connections on the recovery delivery line are open correctly.
Replace filter	The filter capacity is almost full	Provide to replace the filter soon
Change vacuum pump oil	The vacuum pump oil must be changed	Provide to changed the vacuum pump oil
Error code 08	Error during the record of the SD-card	Re-start the unit

7. Accessories and spare parts

Code	***Description***
14015013	XH412 anti-acid filter drier
12002003	K1 L mineral oil for vacuum pump, bottle of 1.000cc
12002006	Ester oil for compressor
14020014001	G19020 kit of gaskets for 1/4sae hoses - 10pcs

8. Weight and dimensions

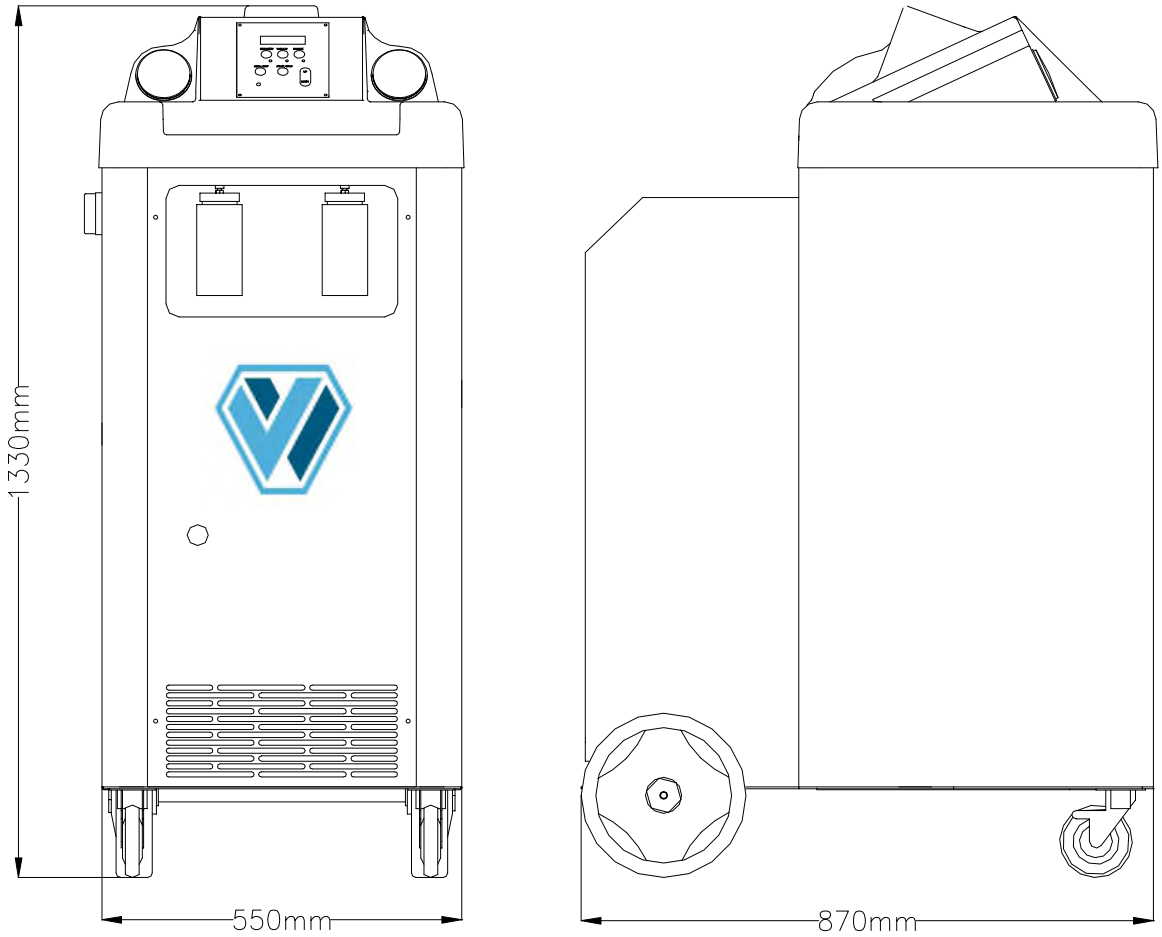

Net weight with empty internal bottle 140 kg

Wigam spa reserves the right to discontinue, or change at any time specifications or designs without notice and without incurring obligations according to her policy of always improving her products.

Layout : WIGAM S.p.A.
Printed in Italy
First edition : November 2012

WIGAM S.p.A.
Loc.Spedale 10/b
52018 Castel San Niccolò
(AR) Italy
Tel. 0575 / 5011
Fax. 0575 / 501200

CE Declaration of conformity

We, signers of this declaration, declare under our own exclusive responsibility, that unit, model :

150-HP

and all its versions

manufactured in our company and to be used for:

refrigerant gas recovery, recycling and charge

are planned according to the following directives prescriptions :

- **2006/42/CEE Machines directive**
- **2004/108/CE (Directive on electromagnetic compatibility)**
- **2006/95/EEC Directive on low voltage**
- **IEC 34-11 (EN 60034) General standards on single phase electric, rotary machines**

Technical booklet drawn up by WIGAM SPA

Castel San Niccolò
30/10/12

Gastone Vangelisti
(President)

Loc.Spedale 10/b 52018 Castel San Niccolò (AR) ITALY
Tel. ++39-0575-5011 Fax. ++39-0575-501200
www.wigam.com - info@wigam.com