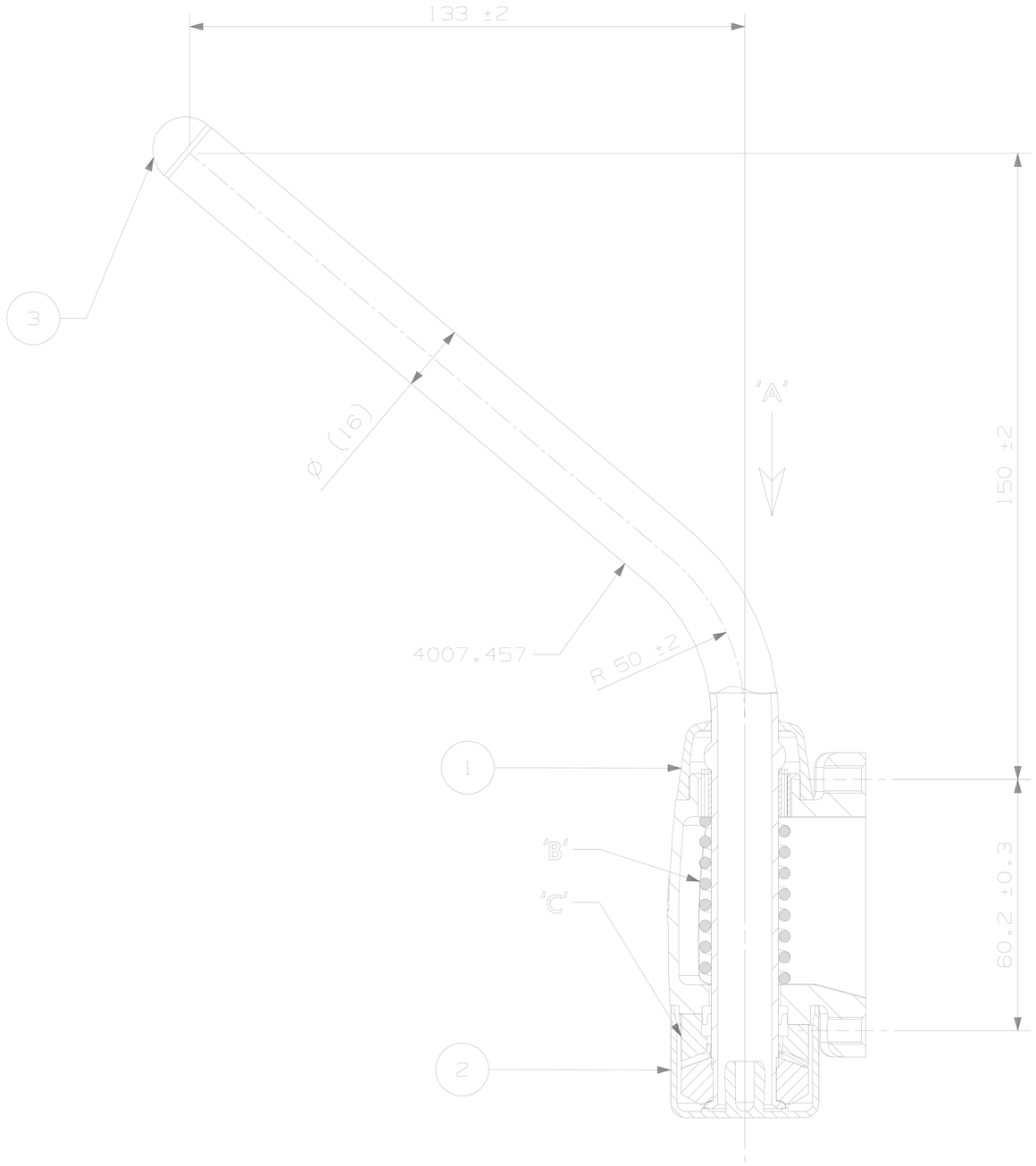

PART SECTION THRO'
HINGE BODY

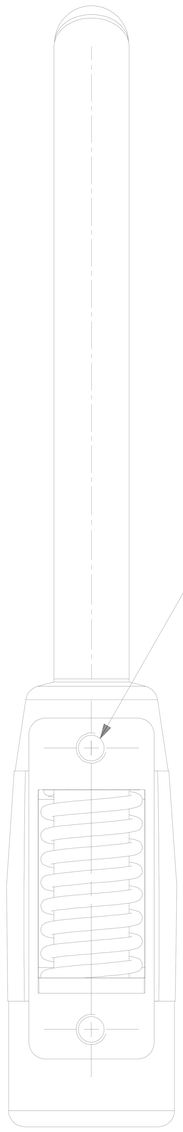

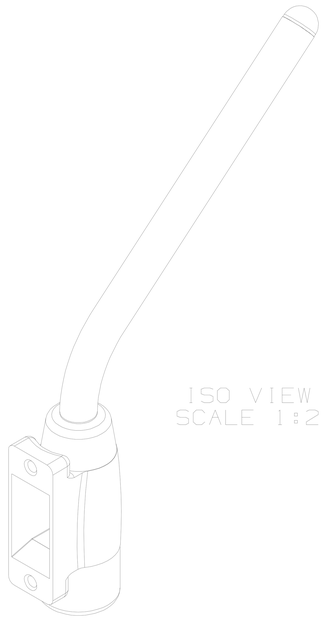

ISO VIEW
SCALE 1:2

ADJUSTMENT

THE NOMINAL POSITION OF THE ARM CAN BE ADJUSTED TO WITHIN 5° OF ANY DESIRED POSITION. THIS CAN BE DONE ONLY WHEN SECURELY MOUNTED BY PULLING ARM FIRMLY DOWN IN DIRECTION OF ARROW 'A' TO ALLOW SPRING 'B' TO DISENGAGE VERNIER COLLAR 'C'. ROTATE ARM TO DESIRED POSITION AND RELEASE ARM UPWARDS. ROTATE ARM TO ENSURE DOGS ON COLLAR 'C' ARE PROPERLY ENGAGED. (ONLY IF SPRING 'B' IS FITTED).

OPERATIONS

1. DRILL AND TAP HOLES IN MIDIBRAC
2. CHECK BREAKOUT TORQUE
   SEE DRG No 7200.999 FOR DATA
3. GREASE MOVING PARTS
4. ASSEMBLE CAPS AND END PLUGS

CERTIFICATION PROCEDURE INVOLVED
UNAUTHORISED DEVIATION STRICTLY FORBIDDEN

MOD No	REFERENCE	ISS	DATE	BY
15923		E	7/05/03	AXS

MATERIAL	SPEC
FINISH	SPEC
EST. VOL.	MASS
TOOL No.	

DIMENSIONS IN MILLIMETRES
DO NOT SCALE — IF IN DOUBT - ASK

DRAWN IN ACCORDANCE WITH BS308

DIMENSIONAL TOLERANCES :
AS SPECIFIED

3RD ANGLE PROJECTION — METRIC DESIGN

BRITAX PMG LTD
BESSINGBY INDUSTRIAL EST
BRIDLINGTON
EAST YORKSHIRE ©
YO16 4SJ

Britax

DRAWN	DATE	CHECKED	SCALE
A.Stevens	7/05/03	SEE RELEASE /CHANGE NOTE	1:1

TITLE
MIDIBRAC ARM ASSY

A2 — PART No. 4007.456 — Sht No 1 of 1